# ROYAL 186 ESS-1.0-GR-L/OR

## CODE NUMBER

3452663

## DESCRIPTION

1.0 gpf, Graphite Finish, Fixture Connection Top Spud, Single Flush, 3/4" Control Stop, Less Override, Hardwired, Sensor-Operated, 24V, Royal® Exposed Sensor Hardwired Urinal Flushometer.

## DETAILS

- Flush Volume: 1.0 gpf (3.8 Lpf)
- Finish: Graphite (GR)
- Power Type: Hardwired
- Valve: Diaphragm
- Valve Body Material: Semi-red Brass
- Fixture Type: Urinal
- Fixture Connection: Top Spud
- Rough-In Dimension: 11 ½" (292mm)
- Spud Coupling: ¾" (19mm)
- Supply Pipe: ¾" (19mm)
- Override: Less (L/OR)
- Control Stop: 3/4"
- Voltage: 24V

## FEATURES

- Sensor-activated, hardwired urinal flushometer
- PERMEX™ Synthetic Rubber Diaphragm with Dual Filtered Fixed Bypass
- Durability is facilitated with high copper, low zinc brass castings for dezincification resistance
- Adjustable tailpiece
- Critical components, including cover, valve body, control stop and sweat solder kit, are made of semi-red brass
- PERMEX synthetic rubber diaphragm with Dual Filtered Fixed Bypass
- Valve body, Cover, Tailpiece and Control Stop shall be in compliance with ASTM Alloy Classification for Semi-Red Brass
- Valve shall be in compliance to the applicable sections of ASSE 1037.

## VIDEOS

- ESS Flushometer
- PVD Special Finishes

## COMPLIANCES & CERTIFICATIONS

(ADA Compliant, BAA Compliant, BABAA Compliant, cUPC Certified, UL Certified, UPC Certified)

## RECOMMENDED SPECIFICATION

Valve Body, Cover, Tailpiece and Control Stop shall be in conformance with ASTM Alloy Classification for Semi- Red Brass. Valve shall be in compliance with the applicable sections of ASSE 1037 and ANSI/ASME 112.19.2. Valve Body, Cover, Tailpiece and Control Stop shall have a PVD Graphite finish.

## ELECTRICAL SPECIFICATIONS

- Arming Delay: 8 seconds
- Control Circuit: Solid State/24 VAC Input/24 VAC Output
- Flush Delay: 1s
- Self-Adaptive Window: ±8
- Sensor Range: 15"–30" (381–762mm)
- Solenoid Operator: 24 VAC
- Transformers (specify separately):
  - 0345154
  - 0345999

## VALVE OPERATING PRESSURE (FLOWING)

15–80 PSI (103–552 kPa). Specific fixtures may require greater minimum flowing pressure - consult manufacturer requirements.

## DOWNLOADS

- Royal ESS TMO Installation Instructions
- Royal ESS Concealed and Exposed Installation Instructions
- Control Stop Repair and Maintenance Guide
- Flush Connections Flanges Repair and Maintenance Guide
- Tail Piece Repair and Maintenance Guide
- Optima ESS Repair and Maintenance Guide
- Flushometer Pressure gauges
- Additional Downloads

**Sloan 10500 Seymour Ave, Franklin Park, IL 60131**
Phone: 800.982.5839 • Fax: 800.447.8329 • sloan.com

**NOTES**

All information contained within this document subject to change without notice.

Looking for other variations of the ROYAL 186 ESS product? View the general spec sheet with all options.

**WARRANTY**

View Warranty Information

**ROUGH-IN**

186

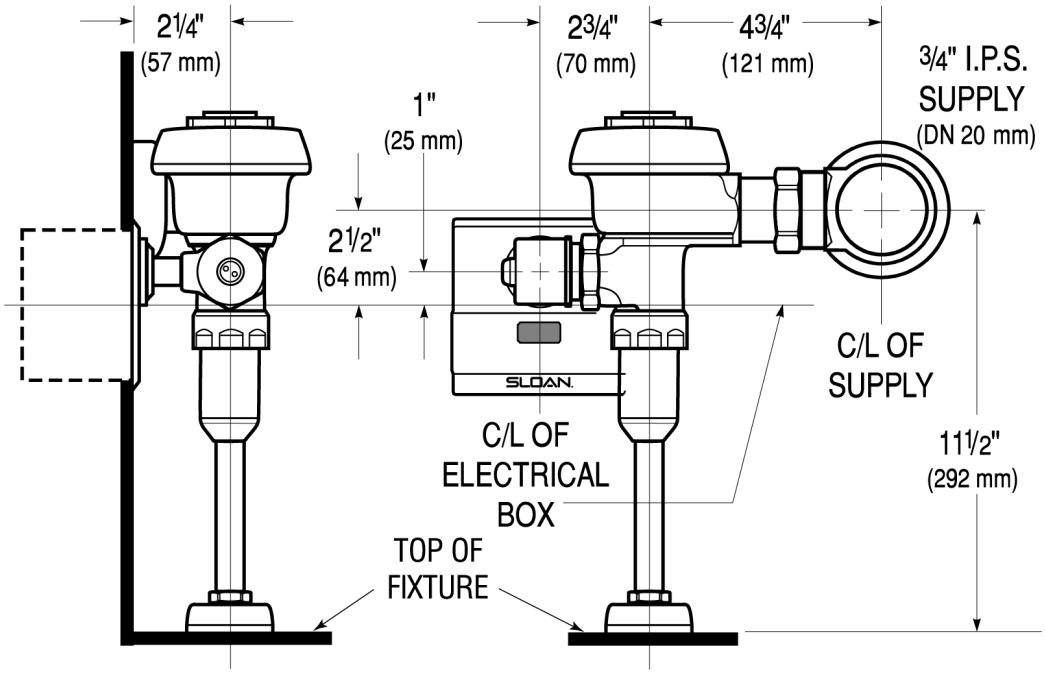


**Sloan 10500 Seymour Ave, Franklin Park, IL 60131**
Phone: 800.982.5839 • Fax: 800.447.8329 • sloan.com